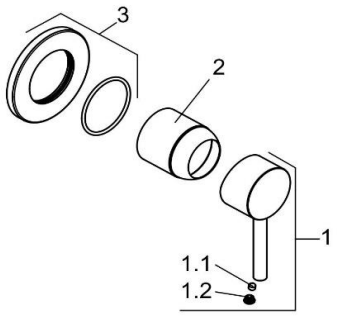

38925N076		Unterputz-Brause-Einhandmischer	concealed single lever shower mixer
1	73731N0-00	HEBEL BOZZ	LEVER BOZZ
1.1	92204601-00	GEWINDESTIFT	GRUB SCREW
1.2	930197N0-00	STOPFEN	PLUG
2	922154N0-00	ABDECKKAPPE	COVER CAP
3	74488N0-00	UP - ROSETTE	ESCUTCHEON, CONCEALED