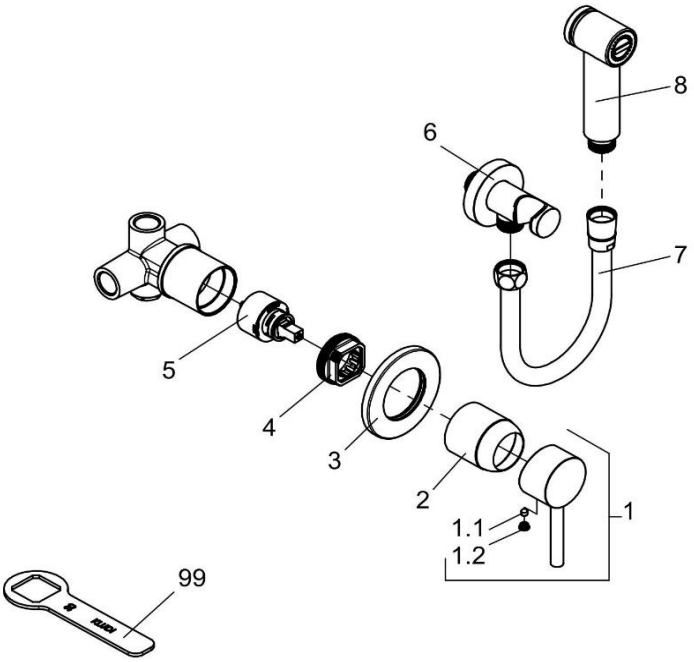

03/20->

389983976		Hygiene- Set	hyienic- set
1	7373139-00	HEBEL BOZZ	LEVER BOZZ
1.1	92204601-00	GEWINDESTIFT	GRUB SCREW
1.2	93019739-00	STOPFEN	PLUG
2	92215439-00	ABDECKKAPPE	COVER CAP
3	7448839-00	UP - ROSETTE	ESCUTCHEON, CONCEALED
4	93033300-00	SPANNSCHRAUBE	FASTENING SCREW
5	7560700-00	STEUEREINHEIT	CERAMIC CARTRIDGE
6	6054739-00	SCHLAUCH - ANSCHLUSSBOGEN	HOSE CONNECTING BEND
7	7214939-00	BRAUSESCHLAUCH	SHOWER HOSE
8	7343439-00	HYGIENE SIDE SPRAY	HYGIENIC SIDE SPRAY
99	92914900-00	SPANNSCHRAUBENSCHLÜSSEL	WRENCH FOR FASTENING SCREW

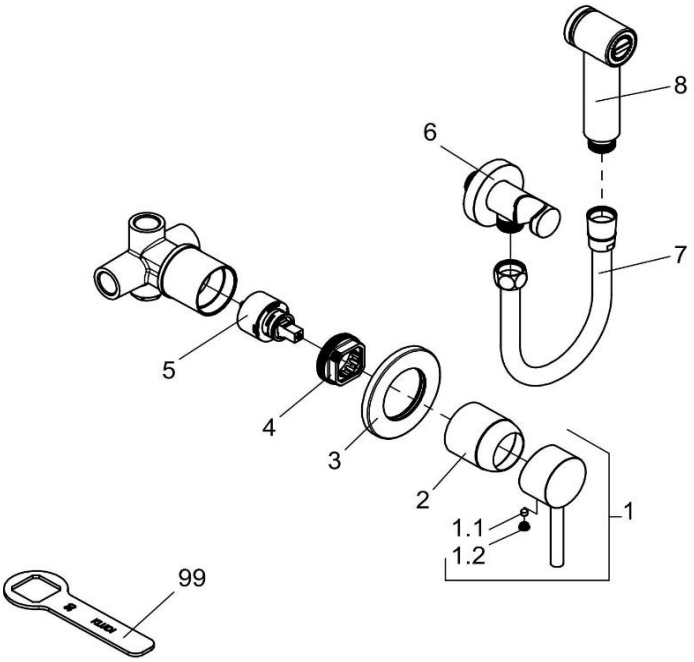

-> 02/20

389983976		Hygiene- Set	hyienic- set
1	7373139-00	HEBEL BOZZ	LEVER BOZZ
1.1	92204601-00	GEWINDESTIFT	GRUB SCREW
1.2	93019739-00	STOPFEN	PLUG
2	92215439-00	ABDECKKAPPE	COVER CAP
3	7448839-00	UP - ROSETTE	ESCUTCHEON, CONCEALED
4	93033300-00	SPANNSCHRAUBE	FASTENING SCREW
5	7560500-00	STEUEREINHEIT	CERAMIC CARTRIDGE
6	6054739-00	SCHLAUCH - ANSCHLUSSBOGEN	HOSE CONNECTING BEND
7	7214939-00	BRAUSESCHLAUCH	SHOWER HOSE
8	7343439-00	HYGIENE SIDE SPRAY	HYGIENIC SIDE SPRAY
99	92914900-00	SPANNSCHRAUBENSCHLÜSSEL	WRENCH FOR FASTENING SCREW