KLUDI LOGO

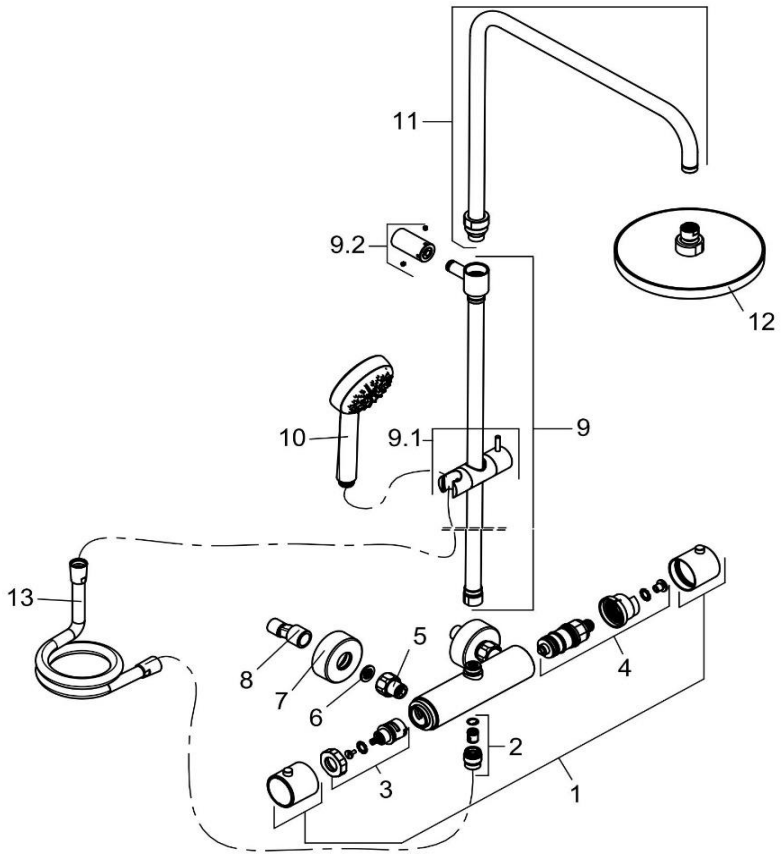

6809505-00		Dual Shower System DN 15	Dual Shower System DN 15
1	7494305-00	GRIFF - SET	HANDLE SET
2	7578005-00	BRAUSEANSCHLUSSNIPPEL	SHOWER CONNECTING NIPPLE
3	7490600-00	DIVERTER KARTUSCHE	DIVERTER CARTRIDGE
4	7370800-00	THERMOSTAT	TEMPERATURE CONTROL UNIT
5	7449505-00	WANDARMATURENANSCHLUSS	WALL CONNECTING NIPPLE
6	95502535-00	SCHMUTZFANGSIEB F. THERMOSTAT	FILTER FOR THERMOSTAT MIXER
7	7469805-00	ROSETTE	ESCUTCHEON
8	7655100-00	S - ANSCHLUSS	S - CONNECTIONS
9	7390105-00	BRAUSESTANGE	SHOWER RAIL
9.1	7317605-00	GLEITSCHIEBER	SLIDING SPOOL
9.2	7360705-00	BEFESTIGUNGSSATZ	MOUNTING KIT
10	6810005-00	HANDBRAUSE	HANDSHOWER
11	7390205-00	BRAUSEBOGEN	SHOWER PIPE BEND
12	6651005-00	KOPFBRAUSE	HEADSHOWER