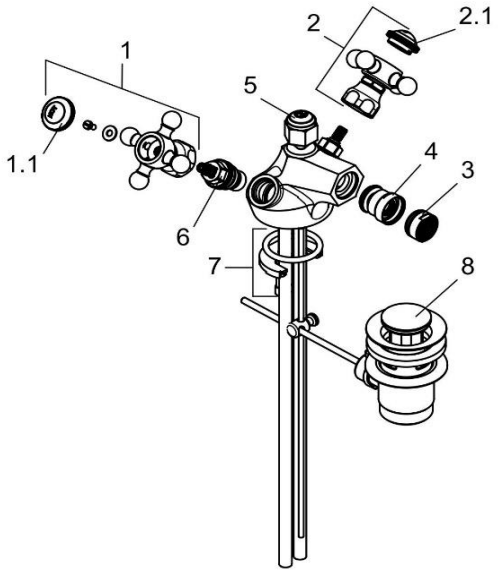

512114520		Bidetarmatur DN 15	bidet mixer DN 15
1	7530145-00	GRIFF HOT - 1926	HANDLE HOT - 1926
1.1	7502345-00	ABDECKKAPPE HOT	COVER CAP HOT
2	7530045-00	GRIFF COLD - 1926	HANDLE COLD - 1926
2.1	7502245-00	ABDECKKAPPE COLD	COVER CAP COLD
3	7641645-00	STRAHLREGLER	AERATOR
4	7537545-00	KUGELGELENK	BALL JOINT
5	7510445-00	ZUGSTANGE	LIFT ROD
6	7502500-00	KERAMIK - OBERTEIL	CERAMIC HEAD PART
7	7623400-00	BEFESTIGUNGSSATZ	MOUNTING KIT
8	7526045-00	ABLAUFGARNITUR	POP UP WASTE