A-A

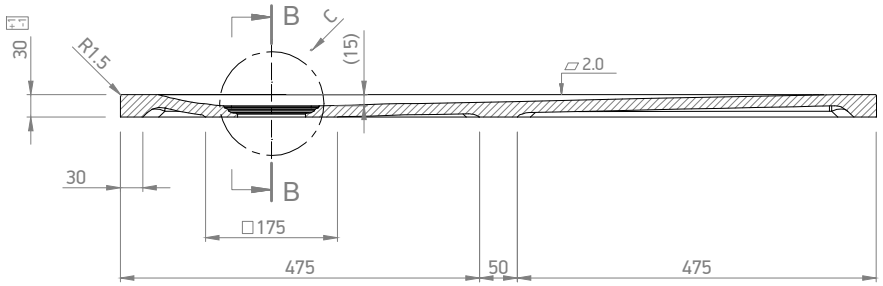

B-B

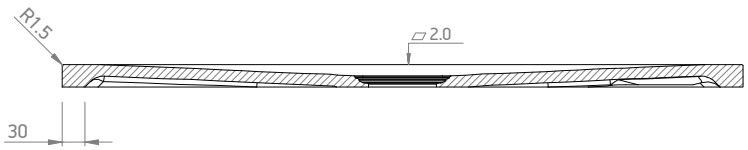

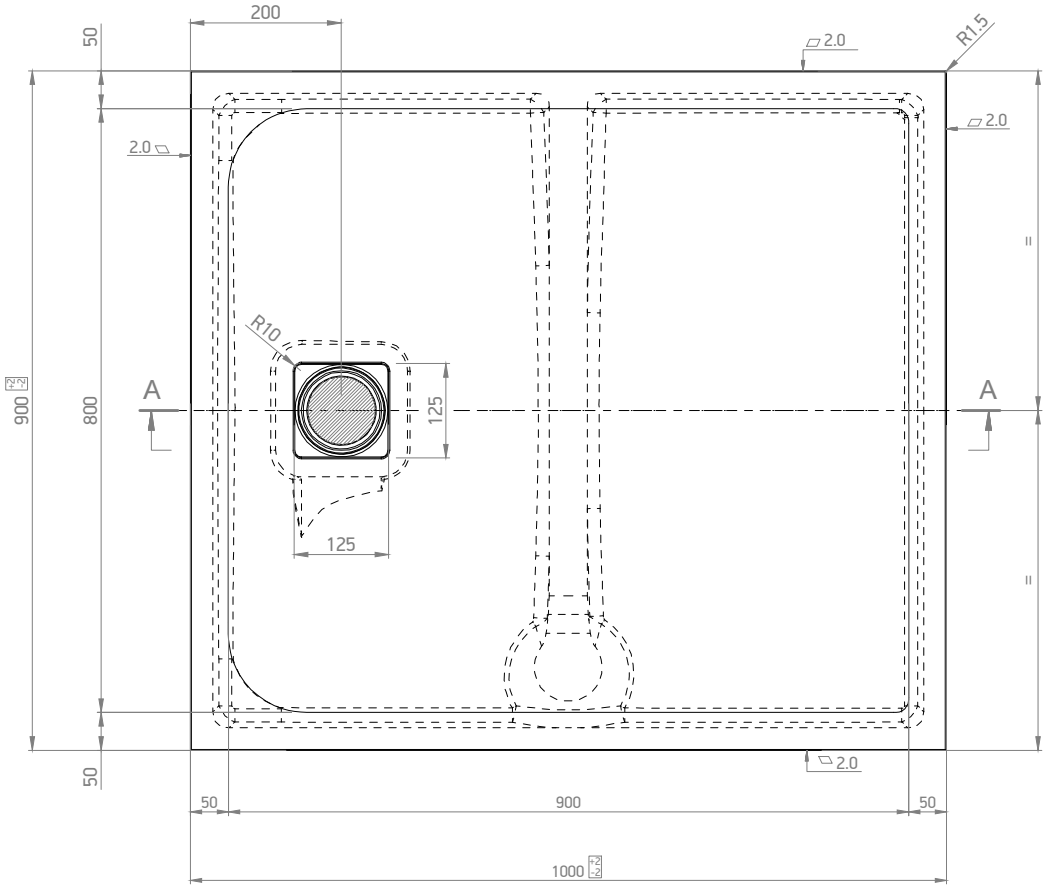

C 1:3

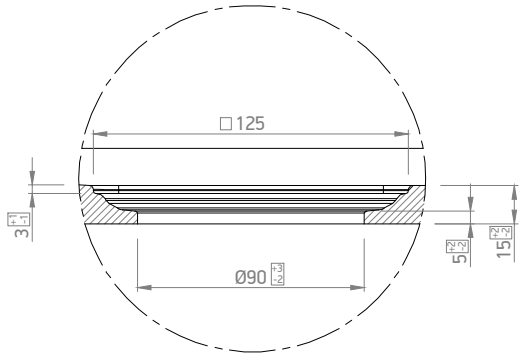

MARMY www.marmy.eu		Name: PIETRA SQUARE - 90x100		
		Item NR.: 80 7850 90 10 XX		
Material: MINERAL SOLID	Finish: PIETRA - SLATE	Visible height: 3 cm	Weight: 32 kg	Scale: 1:10