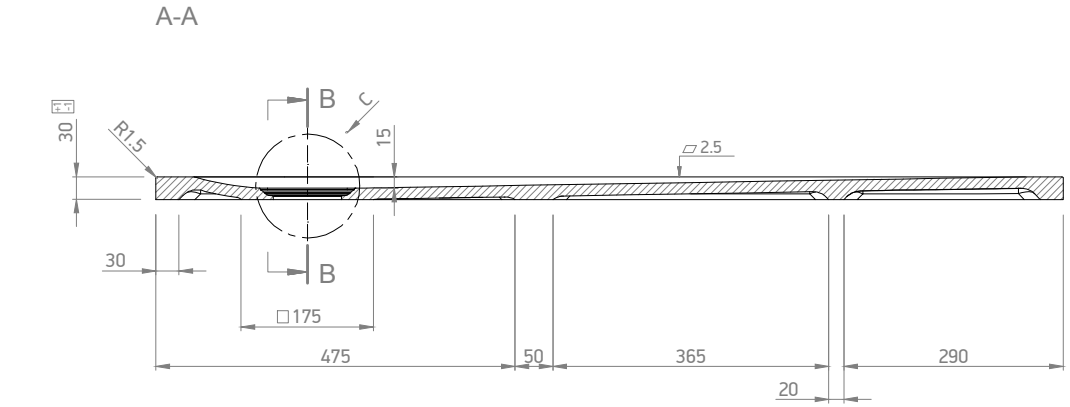

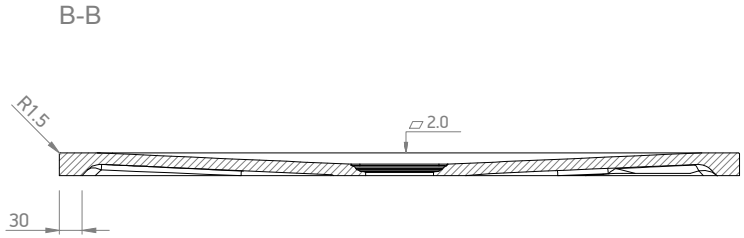

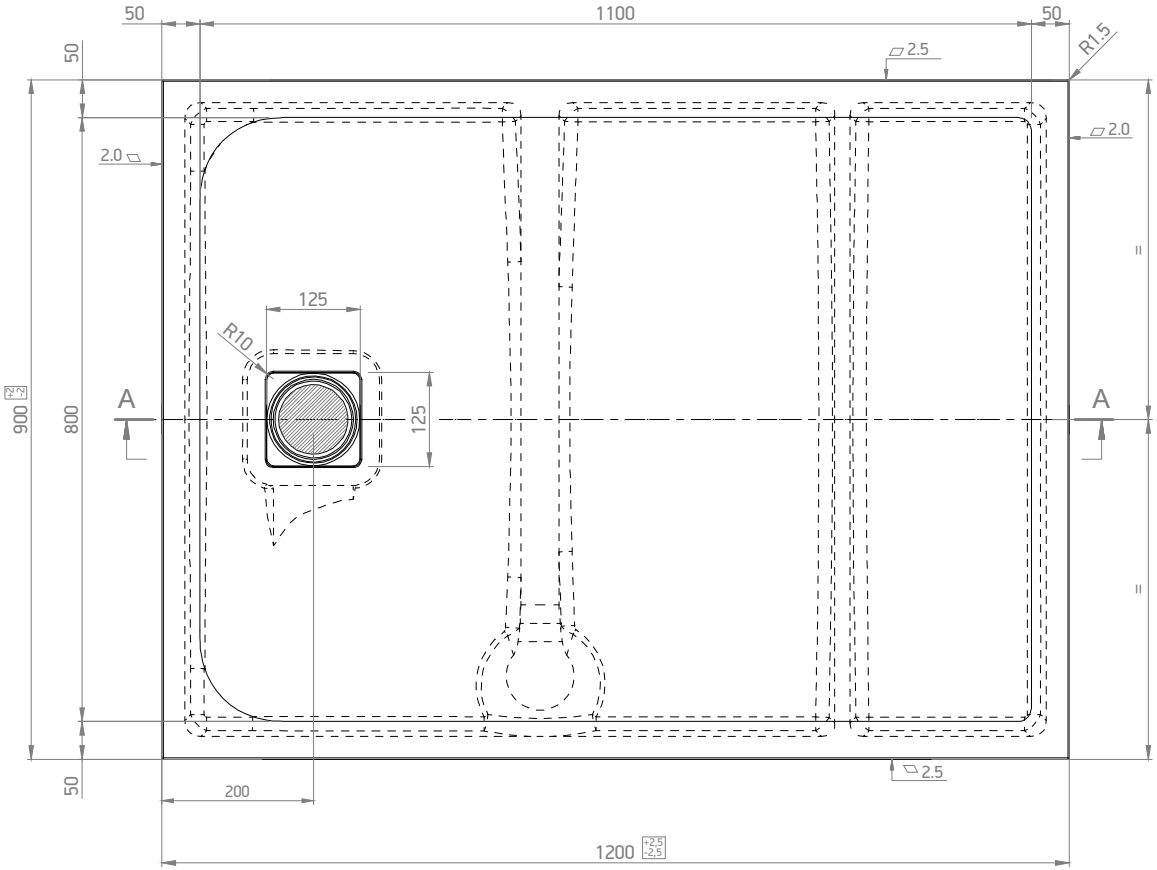

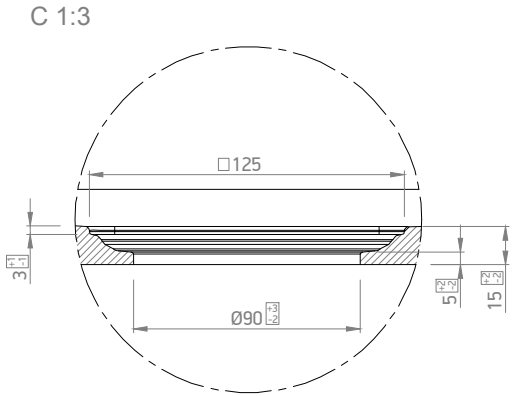

MARMY www.marmy.eu		Name: PIETRA SQUARE - 90x120		
		Item NR.: 80 7643 90 12 XX		
Material: MINERAL SOLID	Finish: PIETRA - SLATE	Visible height: 3 cm	Weight: 38 kg	Scale: 1:10